CUSTOMER TERMINAL	RoHS	LEAD(Pb)-FREE
Sn96%, Ag4%	Yes	Yes

* START LEAD EXITS COIL ON TERMINAL SIDE

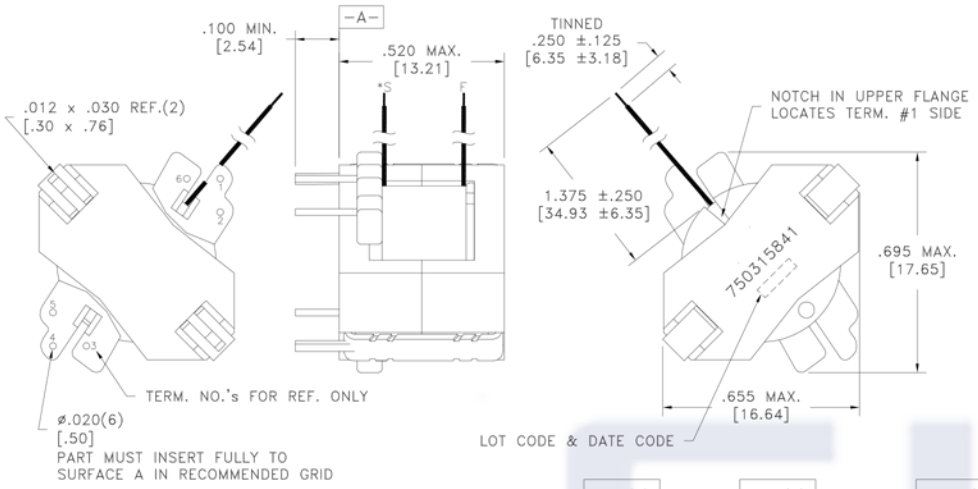

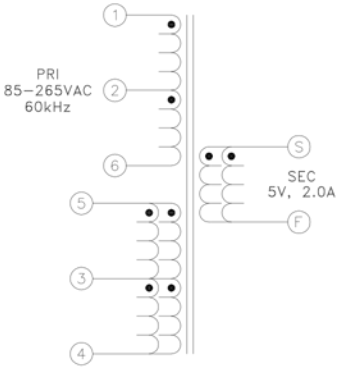

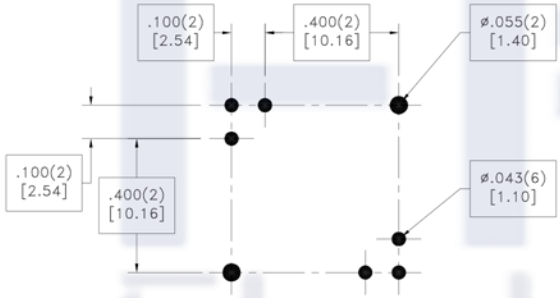

RECOMMENDED
P.C. PATTERN, COMPONENT SIDE

ELECTRICAL SPECIFICATIONS @ 25°C unless otherwise noted:

PARAMETER		TEST CONDITIONS	VALUE
D.C. RESISTANCE	1-2	@20°C	0.570 ohms ±10%
D.C. RESISTANCE	3-4	@20°C	0.157 ohms ±10%
D.C. RESISTANCE	S-F	@20°C	0.014 ohms max.
D.C. RESISTANCE	3-5	@20°C	0.142 ohms ±10%
D.C. RESISTANCE	2-6	@20°C	0.845 ohms ±10%
INDUCTANCE	1-6	10kHz, 100mVAC, Ls	750uH ±10%
SATURATION CURRENT	1-6	20% rolloff from initial	800mA
LEAKAGE INDUCTANCE	1-6	tie(S+F, 3+4+5), 100kHz, 100mVAC, Ls	4.0uH typ., 6.0uH max.
DIELECTRIC	6-S	tie(5+6), 3750VAC, 1 second	3000VAC, 1 minute
TURNS RATIO		(1-6):(S-F)	13:1, ±1%
TURNS RATIO		(1-6):(3-4)	4:1, ±1%
TURNS RATIO		(1-6):(5-3)	5.78:1, ±1%
TURNS RATIO		(1-2):(2-6)	1:1, ±1%

GENERAL SPECIFICATIONS:
OPERATING TEMPERATURE RANGE: -40°C to +125°C including temp rise.

Designed to comply with the following requirements as defined by IEC60950-1, EN60950-1, UL60950-1/CSA60950-1 and AS/NZS60950.1:
- Reinforced insulation for a primary circuit at a working voltage of 265Vrms, 400Vpeak, Overvoltage Category II.

Wire insulation & RoHS status not affected by wire color.
Wire insulation color may vary depending on availability.

REV.	DATE
6A	12/16

Packaging Specifications
Method: Tray
PKG-0936

CONVENTION PLACEMENT

Tolerances unless otherwise specified:
Angles: ±1° Decimals: ±.005 [.13]
Fractions: ±1/64 Footprint: ±.001 [.03]
This drawing is dual dimensioned. Dimensions in brackets are in millimeters.

DRAWING TITLE
TRANSFORMER
eiSos p/n: FKS750315841

compliant RoHS

PART NO.
FKS750315841
SPECIFICATION SHEET 1 OF 1